ECI EUROPEAN CASTING INDUSTRY

Index Page

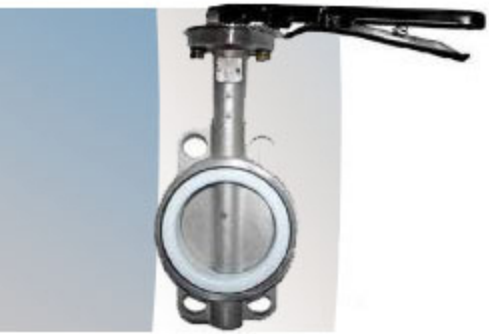

SS BL1 - SS 110 1PC REDUCED BALL VALVE 1

SS BL - SS 210 2PC FULL PORT BALL VALVE 2

SS BL3 NPT - SS 310 3PC FULL PORT BALL VALVE.....3

SS BL3 BW - SS310 3PC FULL PORT BALL VALVE.....4

SF BL - SS 201F FULL PORT BALL VALVE 5

SS GT - SS 502 GATE VALVE 6

SST ST NPT - SS 802 Y-STRAINER 7

SS CH - SS 702 CHECK VALVE 8

SF GT - SS G60 GATE VALVE 9

SF CH - SS G150 CHECK VALVE 10

SS WF - SS 906 CHEK VALVE 11

SF ST - SS V821 Y-TYPE STRAINER 12

SS BT - SS SF101 BUTTERFLY VALVE 13

ECI EUROPEAN CASTING INDUSTRY

Stainless Steel Valves

European Casting Industry ECI is dedicated to manufacturing the best quality of wide range valves. Our goal is to provide first class quality and standards to our clients. ECI valves have a wide range of use in the heating, ventilating, and air-conditioning systems, while also being applicable in the oil gas fields. Each of our products has been systematically tested and monitored to ensure that the standards of quality are being met.

ECI produces the same valves with different standards, this allow better distribution of valves to more areas around the world, particularly in the Middle East, Europe and North America.

MODEL:

ECI - SS 110 1PC Reduced Port Ball Valve

Screwed Ends

ECI EUROPEAN CASTING INDUSTRY
www.ecivalve.it

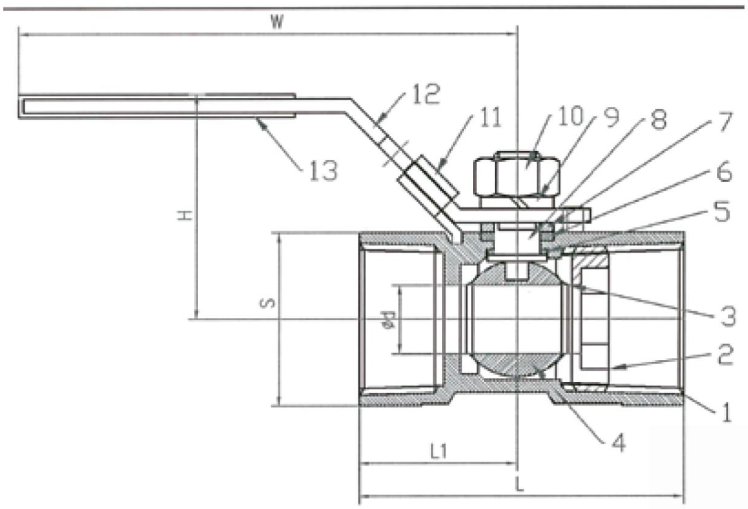

Features

- ► Pipe thread in accordance with ANSI B2.1, BS 21-1973, DIN 259/2999, ISO 228
- ► Blow-out proof stem/Reduce bore
- ► Investment casting body and inscrewed
- ► 800 PSI (55 BAR) W.O.G./1000 PSI (69 BAR) W.O.G.
- ► Material: ASTM-A351-CF8, ASTM-A351-CF8M, ASTM-A216-WCB
- ► OPTION: Locking device
  Oval Handle
  Wing Handle

Dimensions (mm)

Size (In.)	d	L	L1	H	W	S
1/4”	5	39	19	30	70	17
3/8”	6.8	44	21	34	90	21
1/2”	9.2	56.5	27.5	41	100	25
3/4”	12.5	59	29	44	100	32
1”	15	71	34.5	50	110	38
11/4”	20	78	37	55	110	48
11/2”	25	83	40	64	135	53
2”	32	100	49	70	145	65
21/2”	38	128	60	83	190	85
3”	65	153	72	77	189	96

Materials

No.	Description	Material
1	Body	ASTM-A351-CF8M
2	Insert	ASTM-A351-CF8M
3	Ball seat	PTFE
4	Ball	ASTM-A351-CF8M
5	Thrust washer	PTFE
6	Stem packing	PTFE
7	Stem washer	AISI 304
8	Stem	AISI 316
9	Spring washer	AISI 304
10	Stem nut	AISI 304
11	Lock device	AISI 304
12	Handle	AISI 304
13	Plastic cover	Plastic

ECI EUROPEAN CASTING INDUSTRY
All data, descriptions and pictures contained in this leaflet may be subject to change without prior notice.
European Casting Industry Srl | Via Lazzaretto 11 | 20124 Milano MI, Italy | P.Iva: 03228761205 | www.ecivalve.it | info@ecivalve.com

MODEL:

ECI - SS 210 2PC Full Port Ball Valve

Screwed Ends

ECI EUROPEAN CASTING INDUSTRY
www.ecivalve.it

Features

- ► Pipe thread in accordance with ANSI B2.1, BS 21-1973, DIN 259/29999, ISO 228
- ► Blow-out proof stem/Full port
- ► 1000PSI (69 BAR) W.O.G.
- ► Material: ASTM-A351-CF8, ASTM-A351-CF8M
- ► OPTION: Locking device
  Oval Handle
  Wing Handle

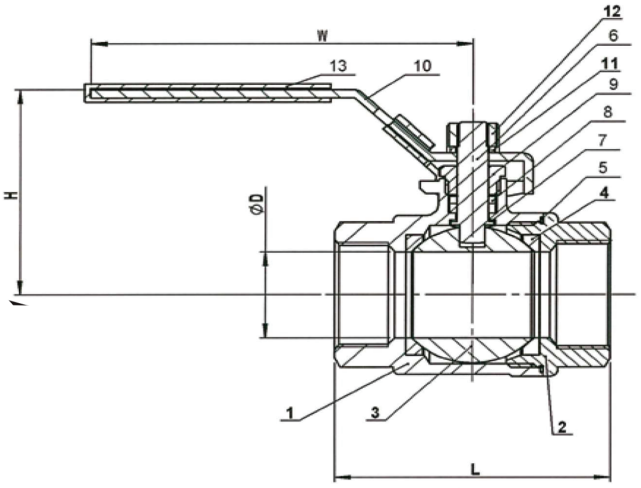

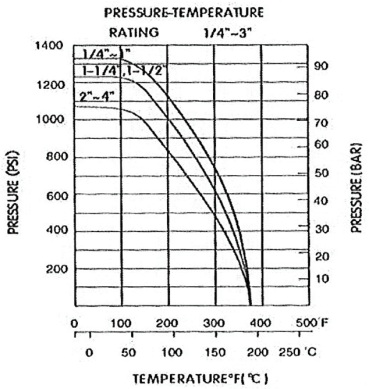

Dimensions (mm)

Size (In.)	L	D	H	W
1/4”	55.3	11.6	51	95
3/8”	55.3	12.7	51	95
1/2”	66.4	15	53	95
3/4”	73.4	20	59	110
1”	84.8	25	73	135
1-1/4”	99.5	32	78	135
11/2”	112.7	38	91	147
2”	129	50	99	165
21/2”	162.8	65	130	215
3”	177	80	142	215
4”	234.5	100	165	310

Materials

No.	Description	Material
1	Body	ASTM-CF8M-A351
2	Cap	ASTM-CF8M-A351
3	Ball	ASTM-CF8M-A351
4	Ball seat	PTFE
5	Joint gasket	PTFE
6	Stem	AISI 316
7	Thrust washer	PTFE
8	Stem packing	PTFE
9	Gland nut	AISI 304
10	Handle	AISI 304
11	Stem washer	AISI 304
12	Stem nut	AISI 304
13	Plastic cover	Plastic

ECI EUROPEAN CASTING INDUSTRY
All data, descriptions and pictures contained in this leaflet may be subject to change without prior notice.
European Casting Industry Srl | Via Lazzaretto 11 | 20124 Milano MI, Italy | P.Iva: 03228761205 | www.ecivalve.it | info@ecivalve.com

MODEL:
ECI - SS 310 3PC Full Port Ball Valve
Screwed End

ECI EUROPEAN CASTING INDUSTRY
www.ecivalve.it

Features
- ► Pipe thread in accordance with ANSI B2.1, BS 21-1973, DIN 259/29999, ISO 228
- ► Blow-out proof stem/Full port
- ► Investment casting body and cap
- ► 1000PSI (69 BAR) W.O.G.
- ► Material: ASTM-A351-CF8, ASTM-A351-CF8M & ASTM-A216-WCB
- ► OPTION: Locking device
  Oval Handle
  Wing Handle

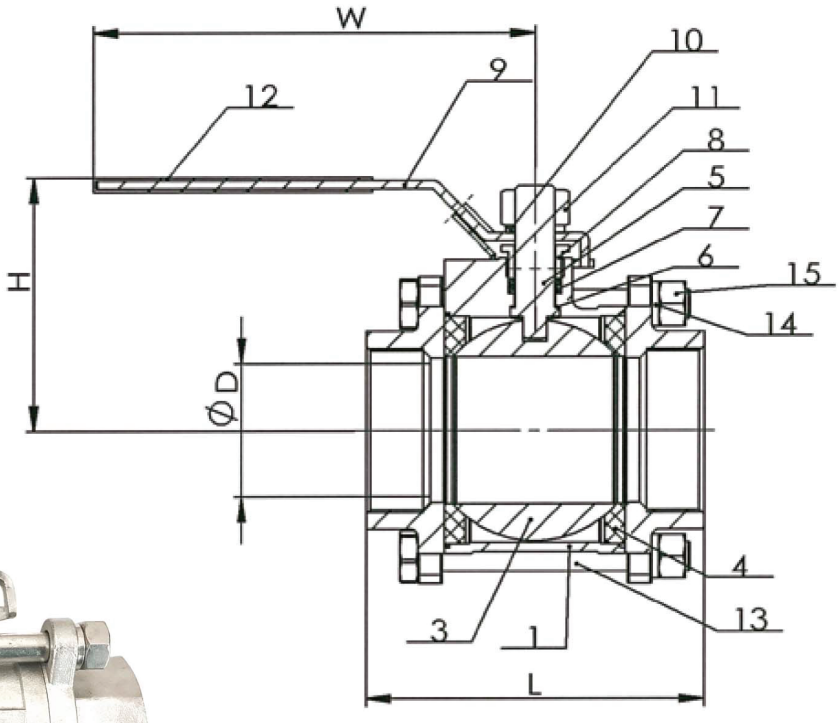

Dimensions (mm)

Size (In.)	L	ØD	H	W
1/2”	75	15	55	95
3/4”	80	20	59	110
1”	90	25	73	135
11/4”	110	32	78	135
11/2”	120	38	91	147
2”	140	50	99	165
21/2”	185	65	130	215
3”	205	80	142	215
4”	240	100	174	310

Materials

No.	Description	Material
1	Body	ASTM-CF8M-A351
2	Cap	ASTM-CF8M-A351
3	Ball	ASTM-CF8M-A351
4	Ball seat	PTFE
5	Stem	AISI 316
6	Thrust washer	PTFE
7	Stem packing	PTFE
8	Gland nut	AISI 304
9	Handle	AISI 304
10	Stem washer	AISI 304
11	Stem nut	AISI 304
12	Plastic	Plastic
13	Bolt	AISI 304
14	Spring washer	AISI 304
15	Hex nut	AISI 304

All data, descriptions and pictures contained in this leaflet may be subject to change without prior notice.
European Casting Industry Srl | Via Lazzaretto 11 | 20124 Milano MI, Italy | P.Iva: 03228761205 | www.ecivalve.it | info@ecivalve.com

MODEL:

ECI - SS 310BW 3PC Full Port Ball Valve

Butt-Weld End

ECI EUROPEAN CASTING INDUSTRY
www.ecivalve.it

Features
- ▶ Pipe thread in accordance with ANSI B2.1, BS 21-1973, DIN 259/2999, ISO 228
- ▶ Blow-out proof stem/
- ▶ Investment casting body and cap
- ▶ 1000PSI (69 BAR) W.O.G.
- ▶ Material: ASTM-A351-CF8M, ASTM-A351-CF8 & ASTM-A216-WCB
- ▶ OPTION: Locking device
  Oval Handle
  Wing Handle

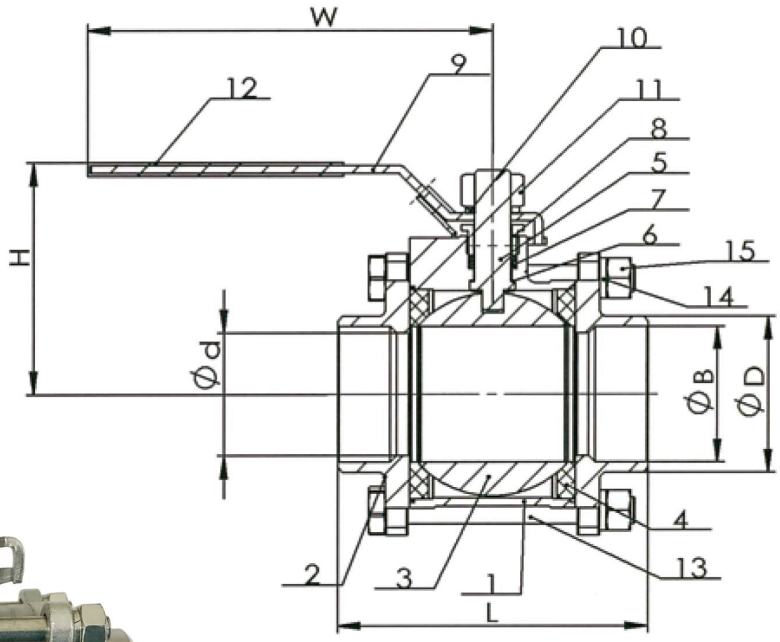

Materials

No.	Description	Material
1	Body	ASTM-CF8M-A351
2	Cap	ASTM-CF8M-A351
3	Ball	ASTM-CF8M-A351
4	Ball seat	PTFE
5	Stem	AISI 316
6	Thrust washer	PTFE
7	Stem packing	PTFE
8	Gland nut	AISI 304
9	Handle	AISI 304
10	Stem washer	AISI 304
11	Stem nut	AISI 304
12	Plastic	Plastic
13	Bolt	AISI 304
14	Spring washer	AISI 304
15	Hex nut	AISI 304

Dimensions (mm)

Size (In.)	L	Ød	H	W	ØB
1/2”	75	15	55	95	15.5
3/4”	90	20	59	110	21.1
1”	100	25	73	135	27.3
11/4”	110	32	78	135	35.2
11/2”	125	38	91	147	41.1
2”	150	50	99	165	52.3
21/2”	190	65	130	215	65.0
3”	220	80	142	215	80.0
4”	270	100	174	310	100.0

All data, descriptions and pictures contained in this leaflet may be subject to change without prior notice.
European Casting Industry Srl | Via Lazzaretto 11 | 20124 Milano MI, Italy | P.Iva: 03228761205 | www.ecivalve.it | info@ecivalve.com

MODEL:

ECI - SS 201F Full Port Ball Valve

Flanged Class 150

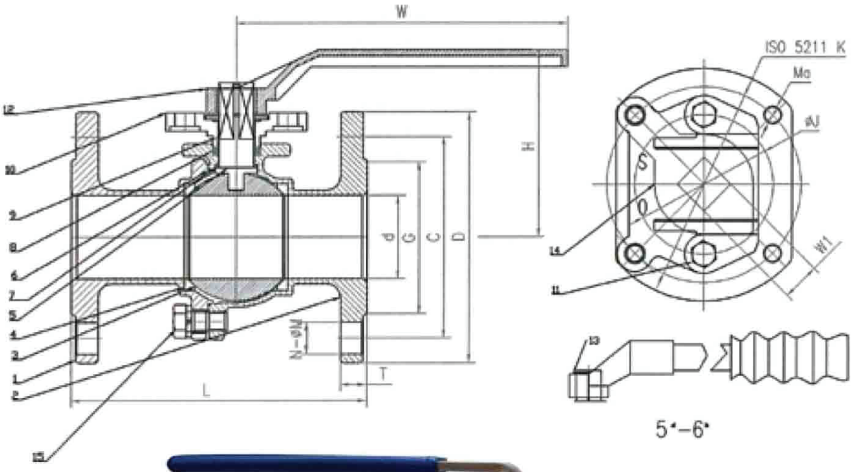

Materials

No.	Description	Material
1	Body	CF8M
2	Cap	CF8M
3	Ball	CF8M
4	Ball seat	PTFE
5	Stem	AISI 316
6	Joint gasket	PTFE
7	Thrust washer	PTFE
8	Stem packing	PTFE
9	Gland packing	PTFE
10	Gland	CF8
11	Gland bolt	AISI 304
12	Handle	CF8
13	Snap ring	AISI 304
14	Stopper	AISI 304
15	Bolt	AISI 304

Features

- ► Body & cap in ASTM-A351-CF8, ASTM-A351-CF8M, ASTM-A216-W(
- ► Flange: ANSI B16.5 CLASS 150
- ► Face to face: ANSI B16.0
- ► Anti-static device, fire safe design
- ► Blow-out proof stem, lever operated
- ► Full port, solid ball/Hollow Ball
- ► Mounting Pad for ISO 5211
- ► OPTION :Fixed Handle
- ► Testing : According to EN 12266-1

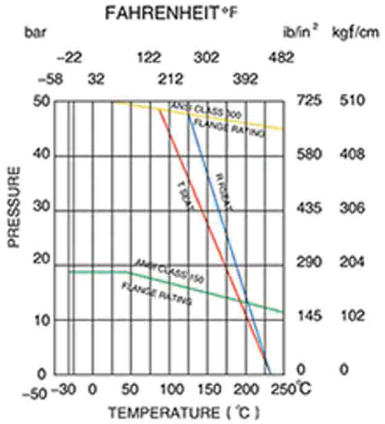

Dimensions (mm)

Size (In.)	d	H	W	W1	J	ISO-521 1	Ma	ANSI-150					
								D	C	G	T	N-ØM	L
1/2”	15	76	160	12	50	F04	M5	89	60.5	35	12.1	4-Ø16	108
3/4”	20	79	160	12	50	F04	M5	98	70	43	12.1	4-Ø16	117
1”	25	82	160	12	50	F04	M6	108	79.5	51	12.1	4-Ø16	127
11/4”	32	86	160	12	50	F07	M6	108	79.5	51	12.1	4-Ø16	140
11/2”	38	106	200	17	62	F07	M8	127	98.6	73	14.5	4-Ø16	165
2”	50	113	200	17	62	F07	M8	152	120.5	92	16	4-Ø19	178
21/2”	65	156	320	21	75.5	F07	M8	178	139.5	105	17.5	4-Ø19	190
3”	80	165	320	21	75.5	F10	M10	190	152.5	127	19.1	4-Ø19	203
4”	100	185	320	21	75.5	F10	M10	229	190.5	157	23.9	8-Ø19	229
5”	125	240	500	24	89	F12	M12	254	216	186	23.9	8-Ø22	356
6”	150	260	500	24	89	F12	M12	279	241.5	216	25.5	8-Ø22	394

ECI EUROPEAN CASTING INDUSTRY
All data, descriptions and pictures contained in this leaflet may be subject to change without prior notice.
European Casting Industry Srl | Via Lazzaretto 11 | 20124 Milano MI, Italy | P.Iva: 03228761205 | www.ecivalve.it | info@ecivalve.com

MODEL:

ECI - SS 502 Gate Valve

Class 200 Screwed Ends

ECI EUROPEAN CASTING INDUSTRY
www.ecivalve.it

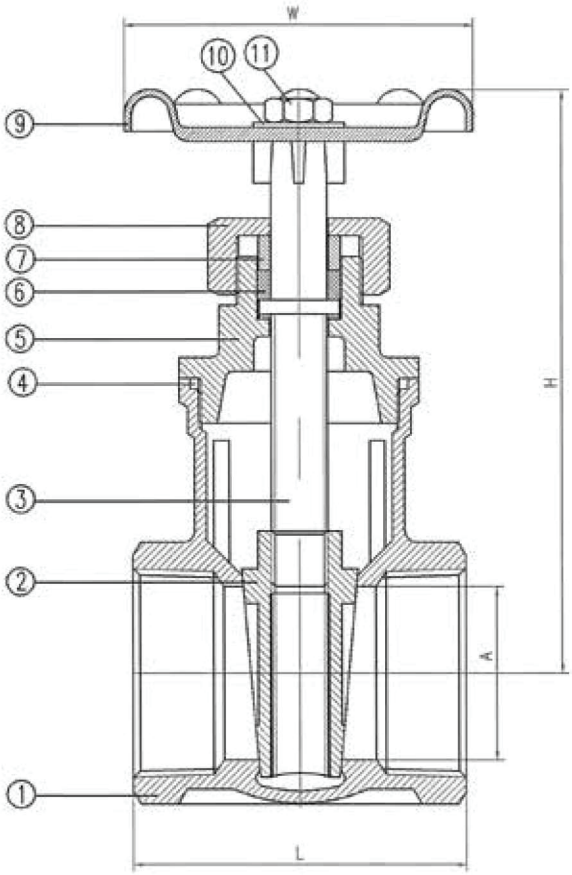

Features

- ► Thread ends conforms to ANSI B 2.1, BS 21-1973, DIN 259/2999, ISO 228
- ► Working Pressure 200 (WOG) Psi at 350 °F / 180 °C
- ► Stainless steel class 200 inside screw and screwed bonnet, wedge disc integral seat, non-rising stem and handwheel.

Dimensions (mm)

Size (In.)	A	H	L	W
1/2”	15	92	55	70
3/4”	20	97	60	70
1”	25	108.5	65	80
11/4”	32	131	76.5	80
11/2”	40	146	85	90
2”	50	168	95	90
21/2”	65	220	116	100
3”	80	262	131	100

Materials

No.	Description	Material
1	Body	ASTM-A351-CF8M
2	Bonnet	ASTM-A351-CF8M
3	Stem	SS 316
4	Joint gasket	PTFE
5	Snap washer	ASTM-A351-CF8M
6	Stem packing	PTFE
7	Gland	SS 304
8	Packing nut	ASTM-A351-CF8M
9	Hand wheel	CAST ALUMINIUM
10	Plate	ALUMINUM
11	Wheel mut	SS 304

ECI EUROPEAN CASTING INDUSTRY
All data, descriptions and pictures contained in this leaflet may be subject to change without prior notice.
European Casting Industry Srl | Via Lazzaretto 11 | 20124 Milano MI, Italy | P.Iva: 03228761205 | www.ecivalve.it | info@ecivalve.com

MODEL:

ECI - SS 802 Y-Strainer

Class 200 Screwed End

ECI EUROPEAN CASTING INDUSTRY
www.ecivalve.it

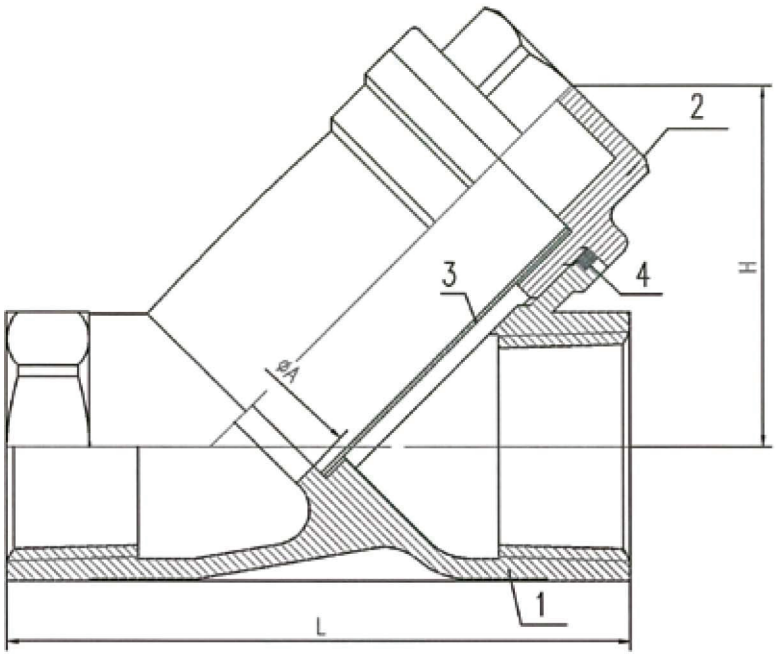

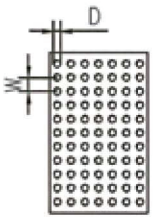

Features

- ► Investment casting body.
- ► Working Pressure 200 (WOG) Psi at 350 °F / 180 °C
- ► The end-to-end length conforms to DIN 3202, Part 4, M8 series. (PN16, PN40)
- ► Thread ends conform to ANSI B 2.1 BS21-1973. DIN 259/2999, ISO 228
- ► Mesh Size 0.85 mm

Dimensions (mm)

Size (In.)	A	L	D	W	H
1/4”	10	65	0.85	2	39
3/8”	12	65	0.85	2	39
1/2”	15	65	0.85	2	39
3/4”	20	80	0.85	2	45
1”	25	90	0.85	2	52
11/4”	32	105	0.85	2	58
11/2”	40	120	0.85	2	72
2”	50	140	0.85	2	80
21/2”	65	180	0.85	2	96.5
3”	78	200	0.85	2	118
4”	100	240	0.85	2	155

Materials

No.	Description	Material
1	Body	CF8/CF8M
2	Cap	CF8/CF8M
3	Screen	SS304/SS316
4	Joint gasket	PTFE

ECI EUROPEAN CASTING INDUSTRY
All data, descriptions and pictures contained in this leaflet may be subject to change without prior notice.
European Casting Industry Srl | Via Lazzaretto 11 | 20124 Milano MI, Italy | P.Iva: 03228761205 | www.ecivalve.it | info@ecivalve.com

MODEL:

ECI - SS 702 Check Valve

Class 200 Swing Type

ECI EUROPEAN CASTING INDUSTRY
www.ecivalve.it

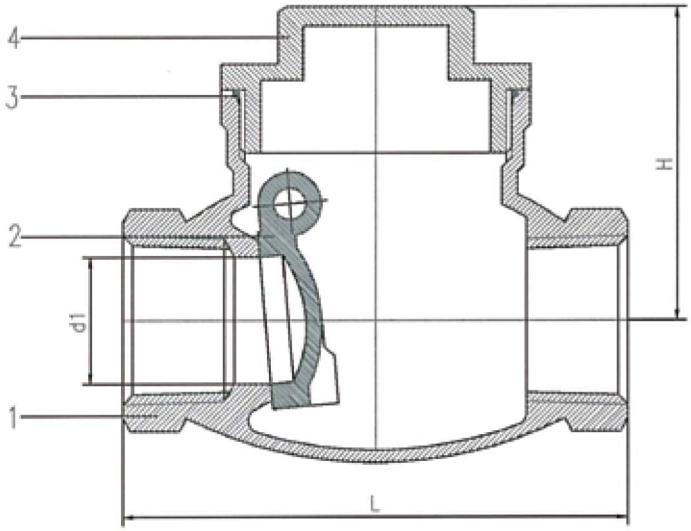

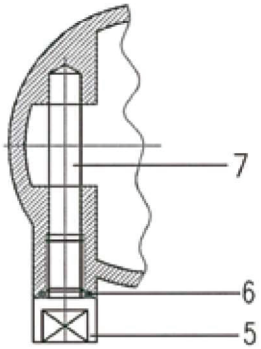

Features

- ► Thread ends conforms to ANSI B 2.1, BS 21-1973, DIN 259/2999, ISO 228
- ► Working Pressure 200 (WOG) Psi at 350 °F / 180 °C
- ► Stainless steel class 200 screwed cap, swing type disc, integral

Dimensions (mm)

Size (In.)	d1	H	L
1/4”	11.3	41	65
3/8”-1/2”	15	41	65
3/4”	20	49.5	80
1”	25	55	92
11/4”	32	62.5	105
11/2”	40	70.5	120
2”	50	79.5	140
21/2”	65	93	180
3”	80	104	200
4”	100	140	240

Materials

No.	Description	Material
1	Body	CF8/CF8M
2	Disc	CF8/CF8M
3	Gasket	PTFE
4	Cap	CF8/CF8M
5	Plug	SS 316
6	Joint gasket	PTFE
7	Hanger pin	SS 316

ECI EUROPEAN CASTING INDUSTRY
All data, descriptions and pictures contained in this leaflet may be subject to change without prior notice.
European Casting Industry Srl | Via Lazzaretto 11 | 20124 Milano MI, Italy | P.Iva: 03228761205 | www.ecivalve.it | info@ecivalve.com

MODEL:
ECI - G60
STAINLESS STEEL GATE VALVE
Class 150

ECI EUROPEAN CASTING INDUSTRY
www.ecivalve.it

TECHNIQUE REQUEST

- **Design : API600**
- **Hull Material : ASTM A351 CF8M**
- **Face-to-face dimension : ASME B16.10**
- **Connecting Flange (RF) : ASME 16.5**
- **Pressure Test : API598**

PERFORMANCE SPECIFICATIONS		
NOMINAL PRESSURE	150LB (2.0 MPa)	TEST MEDIUM
SHELL STRENGTH	(3.0 MPa)	Water
SEALING TEST	(2.2 MPa)	
BACKSEAT TEST	(2.2 MPa)	
AIR SEAT PSIG	80LB (0.6 MPa)	Air
SUITABLE TEMP	-29~315°C	
MEDIA	WATER/STEAM/OIL	

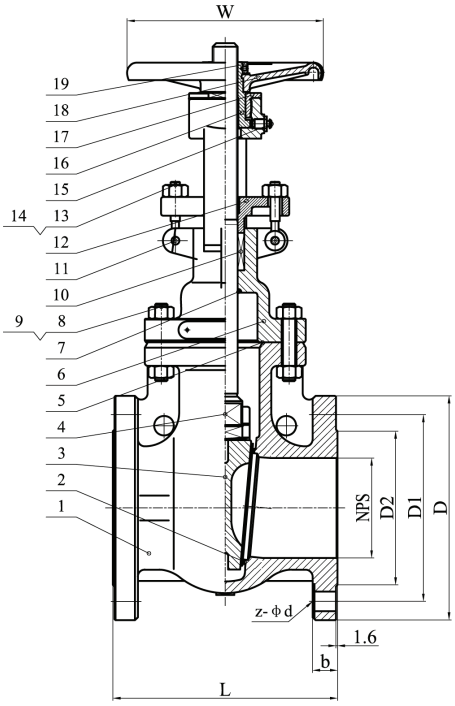

NO	PART NAME	MATERIAL (A351 CF8M)
1	BODY	A351 CF8M
2	SEAT RING	A351 CF8M
3	DISC	A351 CF8M
4	STEM	A182 F316
5	GASKET	316 + GRAPHITE
6	BONNET	A351 CF8M
7	BACK SEAT BUSHING	A351 CF8M
8	COVER BOLT	A193 B8M
9	COVER NUT	A194 - 8M
10	PACKING	GRAPHITE
11	HINGE PIN	A276 316
12	GLAND	A351 CF8M
13	GLAND EYEBOLT	A193 B8M
14	GLAND NUT	A194 - 8M
15	NIPPEL	Cu
16	STEM NUT	ZCuA110Fe3
17	RETAINING NUT	A29 1035
18	HANDWHEEL	A47
19	ANCHOR NUT	A29 1025

DIMENSIONS

Class	NPS	DN	L	D	D1	D2	b	z-Φd	W
150Lb	2½″	65	191	Φ 178	Φ 139.5	Φ 105	18	4- Φ 19	Φ 200
	3″	80	203	Φ 191	Φ 152.5	Φ 127	19	4- Φ 19	Φ 250
	4″	100	229	Φ 229	Φ 190.5	Φ 157	24	8- Φ 19	Φ 280
	5″	125	254	Φ 254	Φ 21.6	Φ 186	26	8- Φ 22	Φ 300
	6″	150	267	Φ 279	Φ 241.5	Φ 216	26	8- Φ 22	Φ 300
	8″	200	292	Φ 343	Φ 298.5	Φ 270	29	8- Φ 22	Φ 350

All data, descriptions and pictures contained in this leaflet may be subject to change without prior notice.
European Casting Industry Srl | Via Lazzaretto 11 | 20124 Milano MI, Italy | P.Iva: 03228761205 | www.ecivalve.it | info@ecivalve.com

MODEL:
ECI - G150 Stainless Steel Check Valve
Flanged Class 150

Technical Request

- Design : ASME B16.34
- Hull Material : ASTM A351 CF8M
- Face-to-face : ASME B16.10
- Connecting Flange (RF) : ASME 16.5
- Pressure Test : API598

PERFORMANCE SPECIFICATIONS		
NOMINAL PRESSURE	150LB (2.0 MPa)	TEST MEDIUM
SHELL STRENGTH	(3.0 MPa)	Water Air
SEALING TEST	(2.0 MPa)	
SUITABLE TEMP	-29~315°C	
MEDIA	WATER/STEAM/OIL	

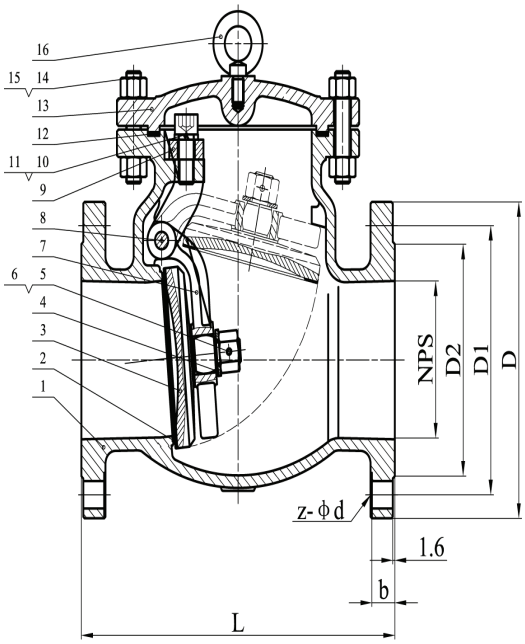

NO	PART NAME	MATERIAL (A351 CF8M)
1	BODY	A351 CF8M
2	SEAT RING	A351 CF8M
3	DISC	A351 CF8M
4	GASKET	SS316
5	OPENINGS PARALLEL	SS316
6	DISC NUT	A194 - 8M
7	SWAY STAFF	A351 CF8M
8	HINGE PIN	A276 SS316
9	HINGE	A351 CF8M
10	LOCK WASHER	SS316
11	BOLT	A193 B8M
12	GASKET	316 + GRAPHITE
13	BONNET	A351 CF8M
14	COVER BOLT	A193 B8M
15	COVER NUT	A194 - 8M
16	EYE SCREW (NPS > 6")	A29 1035

DIMENSIONS

Class	NPS	DN	L	D	D1	D2	b	z-Φd
150Lb	2″	50	203	Φ 152	Φ 120.5	Φ 92	16	4- Φ 19
	2½″	65	216	Φ 178	Φ 139.5	Φ 105	18	4- Φ 19
	3″	80	241	Φ 190.5	Φ 152.5	Φ 127	19	4- Φ 19
	4″	100	292	Φ 229	Φ 190.5	Φ 157	24	8- Φ 19
	8″	200	495	Φ 343	Φ 298.5	Φ 270	29	8- Φ 22

ECI EUROPEAN CASTING INDUSTRY
All data, descriptions and pictures contained in this leaflet may be subject to change without prior notice.
European Casting Industry Srl | Via Lazzaretto 11 | 20124 Milano MI, Italy | P.Iva: 03228761205 | www.ecivalve.it | info@ecivalve.com

MODEL:

ECI - SS 906 Check Valve

Single Door Wafer Type

ECI EUROPEAN CASTING INDUSTRY
www.ecivalve.it

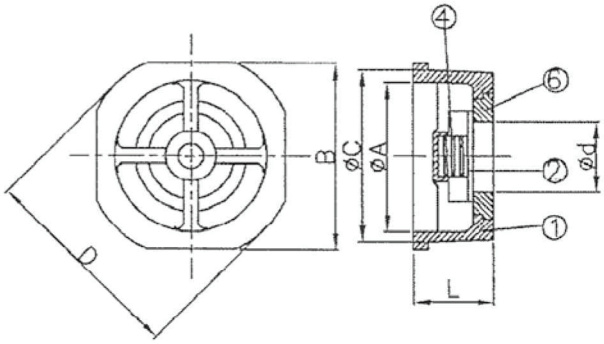

FOR SIZE DN15~DN50

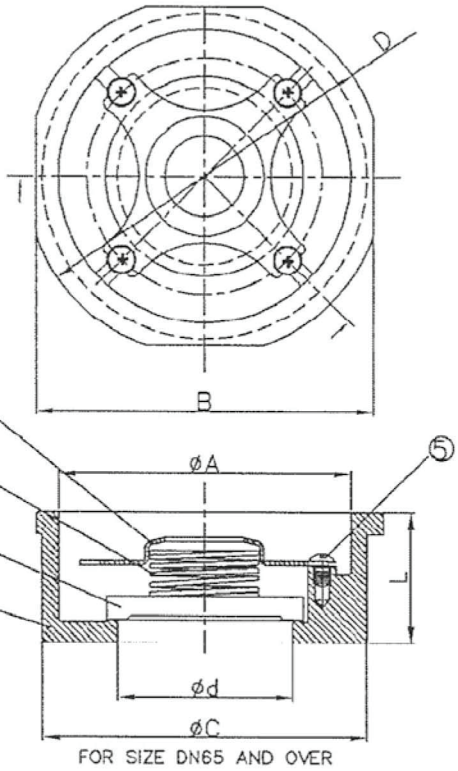

FOR SIZE DN65 AND OVER

Dimensions (mm)

Size (In.)	mm	Φd	B	L	WT (Kg)
1/2”	15	15	45	16	0.1
3/4”	20	20	55	19	0.16
1”	25	25	65	22	0.28
1-1/4”	32	32	79	28	0.52
1-1/2”	40	38	89	31.5	0.7
2”	50	50	99	40	1.1
2-1/2”	65	62	118	46	1.58
3”	80	75.5	134	50	1.76
4”	100	96	154	60	3.3
5”	125	105	190	90	10
6”	150	130	218	106	13
8”	200	170	273	140	24

Features

- ► Port Bore: Full Bore
- ► Face to face: DIN 3202-K4
- ► Material: CF8M (SS316), CF8 (SS304), WCB
- ► Flange: ANSI 150/300, DIN-PN 10/40, JIS-10K
- ► Pressure: 600 PSI (PN25)
- ► Disc: SS316 Metal to metal
- ► Spring: SS316

Materials

No.	Description	Material
1	Body	AISI 316
2	Disc	AISI 316
3	Cap	AISI 316
4	Spring	AISI 316
5	Screw	AISI 316
6	Insert	AISI 316

ECI EUROPEAN CASTING INDUSTRY
All data, descriptions and pictures contained in this leaflet may be subject to change without prior notice.
European Casting Industry Srl | Via Lazzaretto 11 | 20124 Milano MI, Italy | P.Iva: 03228761205 | www.ecivalve.it | info@ecivalve.com

MODEL:
ECI - V821
STAINLESS STEEL “Y” TYPE STRAINER
Class 150

ECI EUROPEAN CASTING INDUSTRY
www.ecivalve.it

PERFORMANCE SPECIFICATIONS		
Nominal Pressure	150Lb (2.0 MPa)	Test Medium
Shell Strength	(3.0 MPa)	Water
Suitable Temp	-29~315°C	
Media	Water/Stream/Oil	

NO	PART NAME	MATERIAL
1	BODY	A351 CF8M
2	STRAINER	SS316
3	GASKET	316 + GRAPHITE
4	BONNET	A351 CF8M
5	SEWAGE BOLTS	A182 F316
6	COVER BOLT	A193 B8M
7	COVER NUT	A194-8M

- **Design : ASME B16.34**
- **Shell Material : ASTM A351 CF8M**
- **Connecting Flange (RF) : ASME B16.5**
- **Surface Quality - MSS SP55**
- **Pressure Test : API 598**

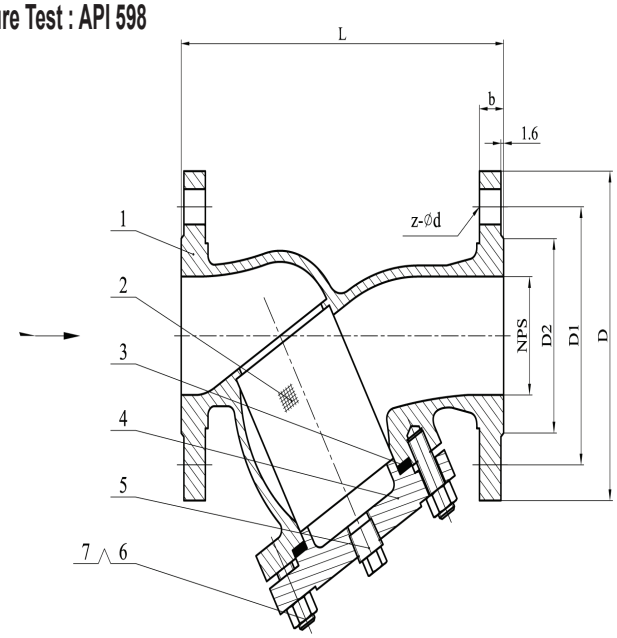

DIMENSIONS

Class	NPS	DN	L	D	D1	D2	b	z-Φd
150Lb	2″	50	203	Φ 152	Φ 120.5	Φ 92	16	4- Φ 19
	2½″	65	216	Φ 178	Φ 139.5	Φ 105	18	4- Φ 19
	3″	80	241	Φ 190	Φ 152.5	Φ 127	19	4- Φ 19
	4″	100	292	Φ 229	Φ 190.5	Φ 157	24	8- Φ 19
	5″	125	356	Φ 254	Φ 216	Φ 186	24	8- Φ 19
	6	150	406	Φ 279	Φ 241.5	Φ 216	26	8- Φ 19

All data, descriptions and pictures contained in this leaflet may be subject to change without prior notice.
European Casting Industry Srl | Via Lazzaretto 11 | 20124 Milano MI, Italy | P.Iva: 03228761205 | www.ecivalve.it | info@ecivalve.com

MODEL:
ECI - SF101
STAINLESS STEEL BUTTERFLY VALVE
Wafer Semi-Lugged

ECI EUROPEAN CASTING INDUSTRY
www.ecivalve.it

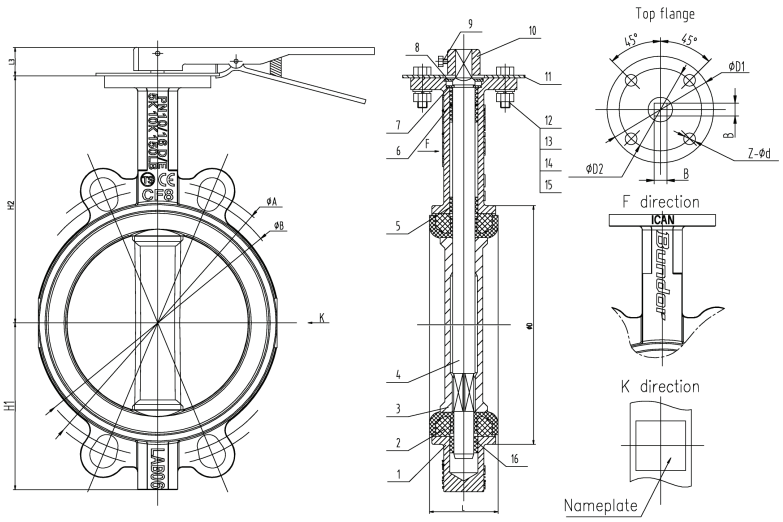

Specifications :

- DESIGN AND MANUFACTURE OF VALVES SHOULD BE CONSISTENT WITH ASME B16.10
- VALVE PRESSURE TEMPERATURE RATING SHULD BE IN ACCORDANCE WITH ASME B16.10
- VALVE INSPECTION AND TEST STANDARDS SHOULD COMPLY WITH ASME 16.10
- THE VALVE BODY SIDE FLANGE SHOULD CONFORM TO EN 1092-1

Dimensions (mm)

SIZE		H1	H2	H3	ØD	L	ØA	ØB	PN10/16		ASME 150LB	
DN	INCH								Øk	n-M	Øk	n-M
65	2.5”	79	136	24	100.4	46	145	127	145	4-18	139.7	4-19
80	3”	95	153	24	116	46	160	145	160	8-18	152.4	4-19
100	4”	110	167	24	147.6	52	190.5	165	180	8-18	190.5	8-19
125	5”	122	193	27	172	56	216	200	210	8-18	215.9	8-22.4
150	6”	141	209	27	202	56	241.3	225	240	8-22	241.3	8-22.4
200	8”	170	251	/	253.7	60	298.4	280	295	8-22	298.5	8-22.4